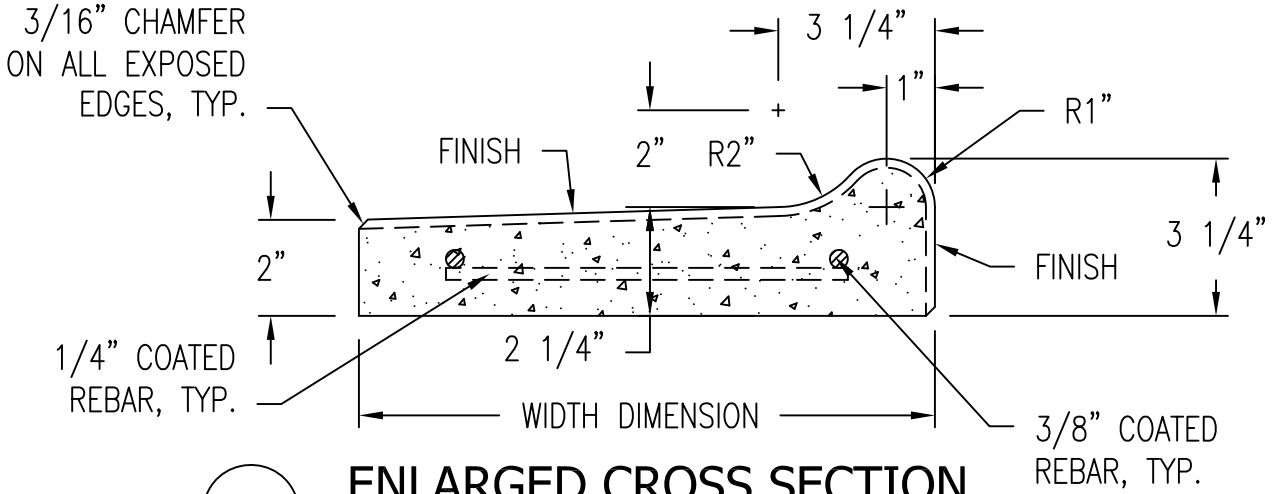

1 ENLARGED CROSS SECTION

Scale: 1/4" = 1"

PARAMETERS:
6'-0" MAXIMUM LENGTH

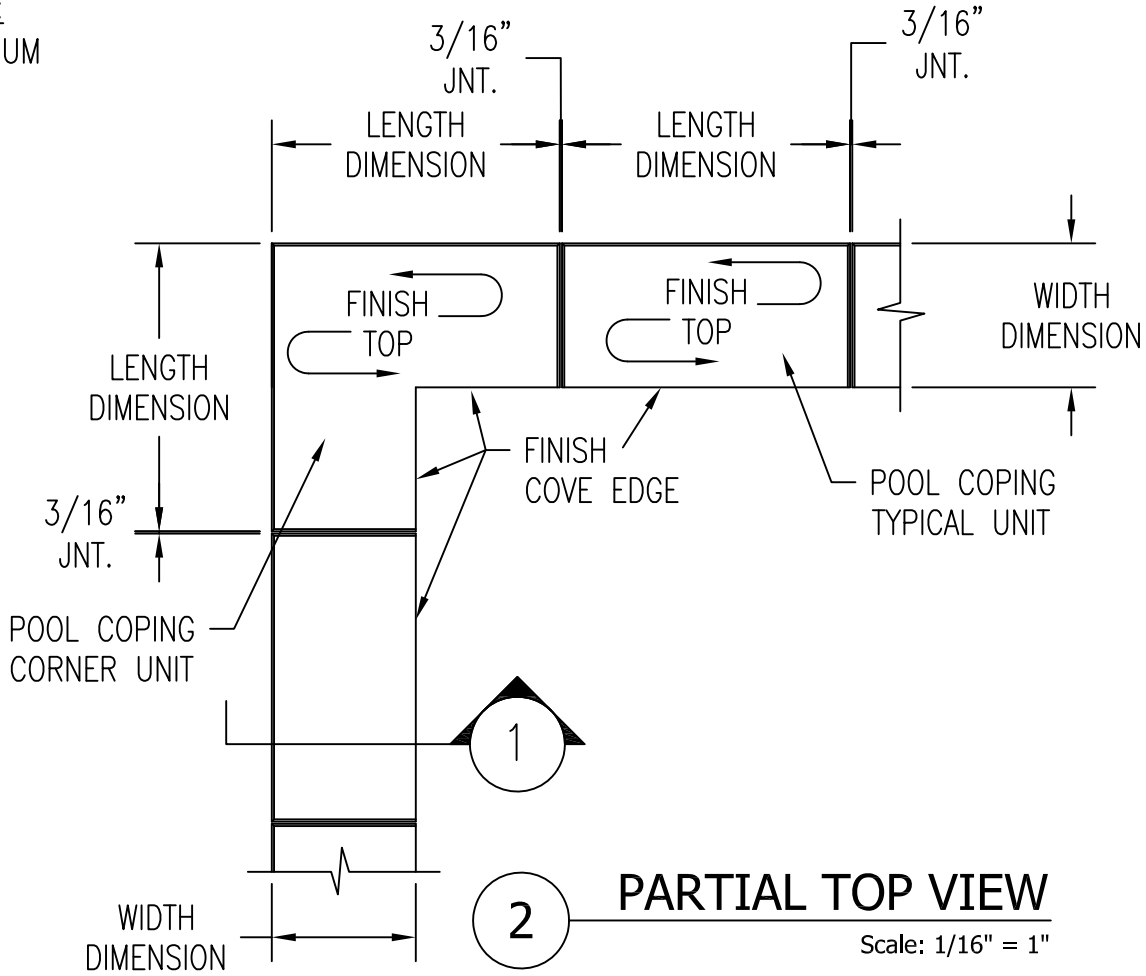

2 PARTIAL TOP VIEW

Scale: 1/16" = 1"

WAUSAU TILE SITE FURNISHINGS

P.O. BOX 1520 WAUSAU, WISCONSIN 54402-1520 800/388-8728
P.O. BOX 967 BANNING, CALIFORNIA 92220 877/849-5695

REVISIONS			DRAWN BY PAW	JOB POOL COPING		MATERIAL PRECAST CONCRETE
NO.	DATE	BY	TITLE POOL COPING	JOB NO.		WEIGHT
1			SCALE AS NOTED	UNLESS OTHERWISE SPECIFIED DIMENSIONS ARE IN INCHES TOLERANCES: ±1/8"	DATE 12/17/10	FINISH OPTIONS
2						DWG. NO. PC-17
3						