Terra-Stand Instructions

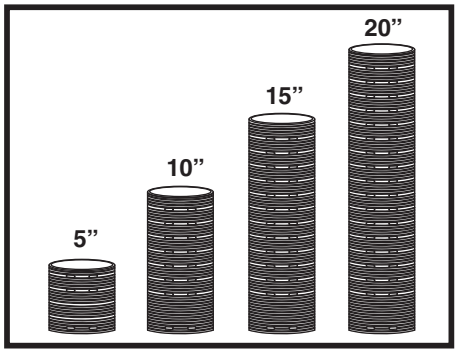

1. After chalking grid lines, select required core size.

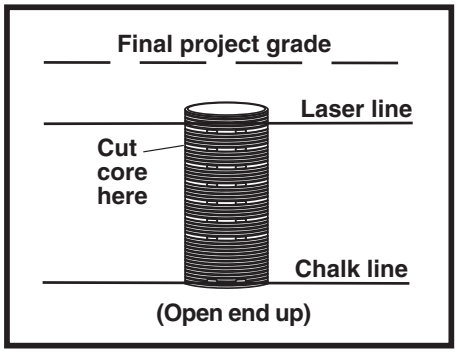

2. Using a laser, determine final height of pedestal. Deduct 1 1/4” for tab and base/top assembly. Cut core on the closest perforated cut line under this measurement.

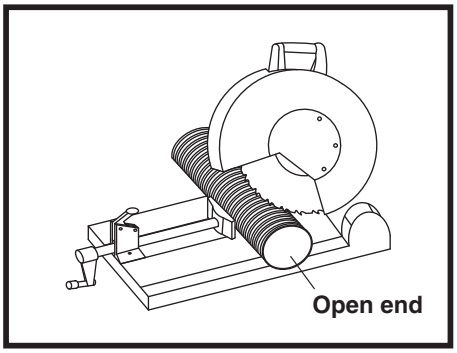

3. Cut Terra-Stand core with a chop saw; cut on the perforated cut lines. Cut off and discard open end.

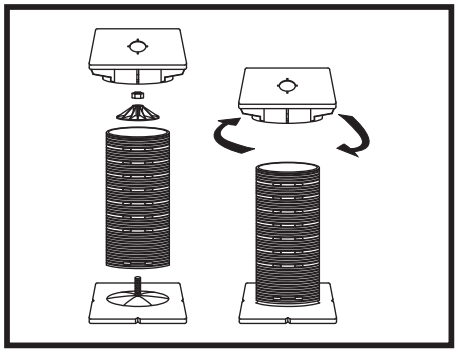

4. Assemble Terra-Stand unit; hand tighten 3/4” nut. (Do not over tighten)

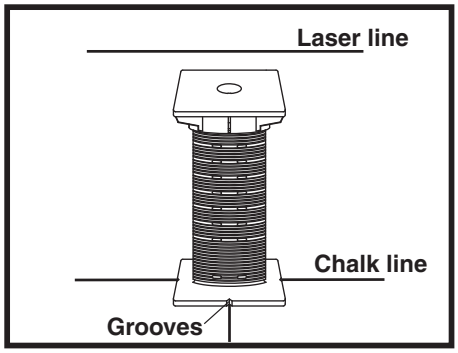

5. Slide pedestal under laser line or straight edge placing base grooves on chalk lines.

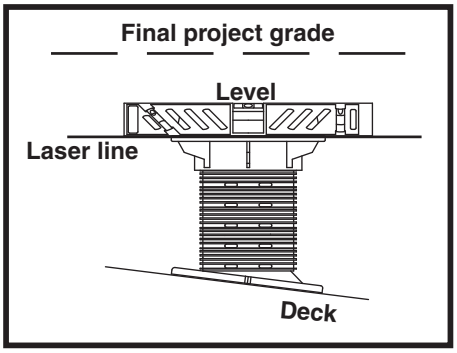

6. Level Terra-Stand in both directions with a carpenter or torpedo level.

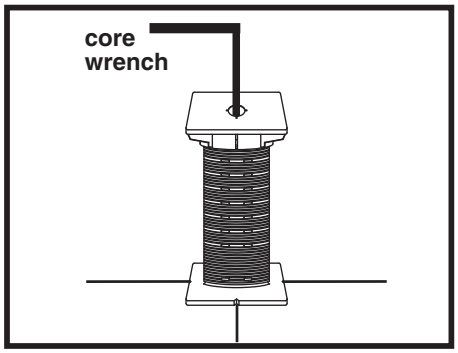

7. Once top is level tighten nut with core wrench or 3/4” socket.

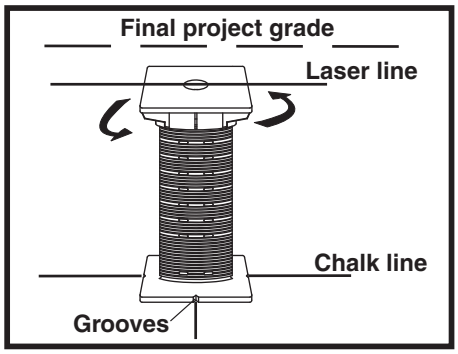

8. Make final adjustments to Terra-Stand as needed.

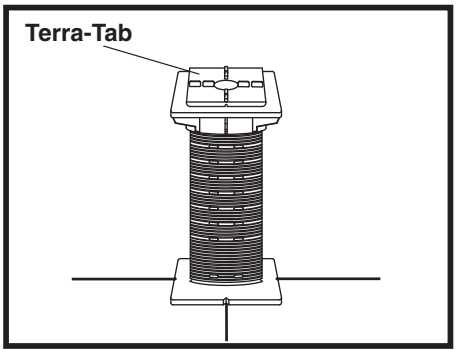

9. Set Terra Tab on top of the Terra-Stand unit.

Terra-Stand Instructions

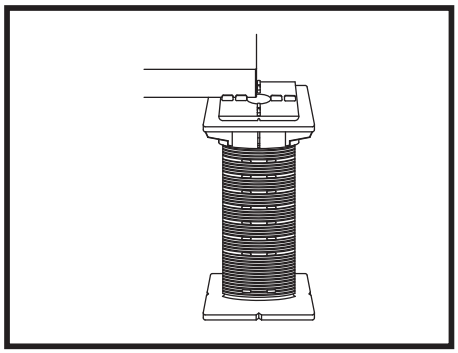

10. Set Terra Pavers on Terra Tab. Shim with Terra Shims if needed.

For a full Terra System One installation guide contact Wausau Tile.

WAUSAU TILE
P.O. Box 1520
Wausau, WI 54402-1520
1-800-388-8728
1-715-359-3121
1-715-359-7456 FAX
Web: wausautile.com
email: paving@wausautile.com

TERRA-STAND ADJUSTS 2” TO 21”

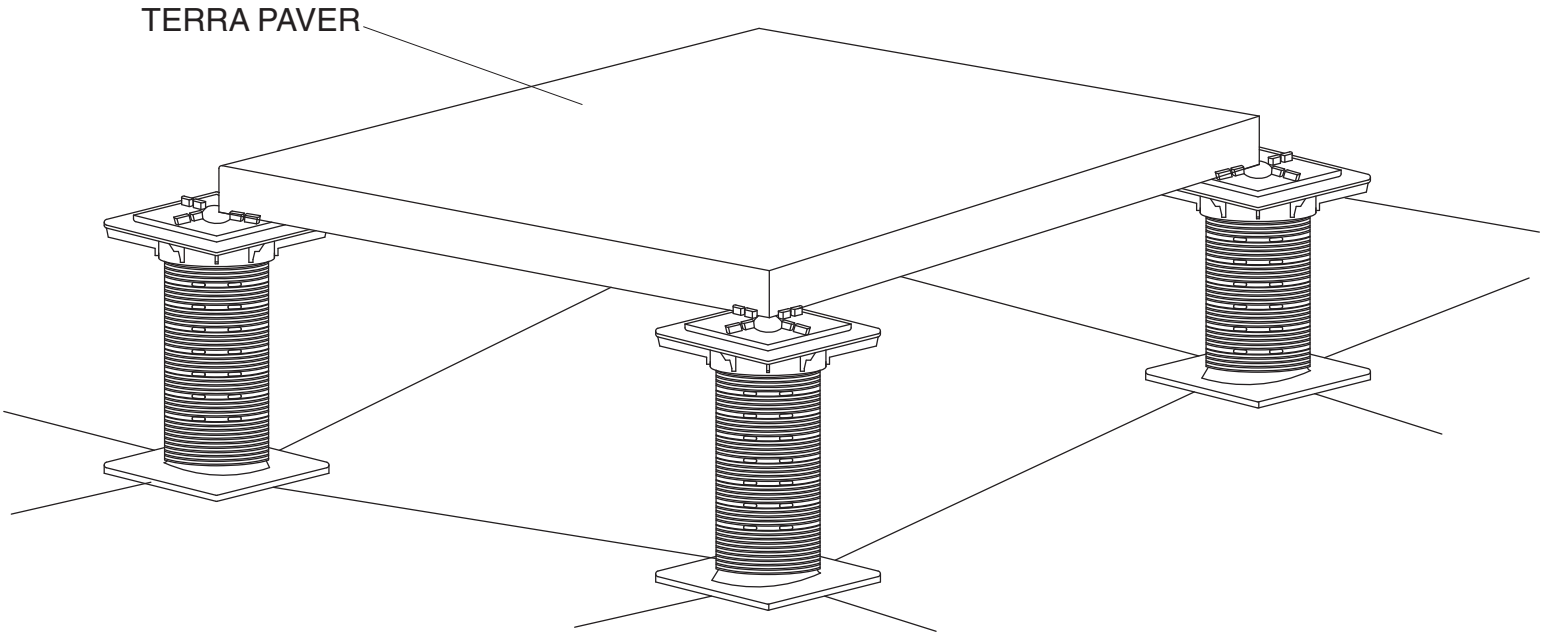

June 2005